HA Series
Waterproof Distribution Box

防水配电箱 (HA 系列)

SHENKAI ELECTRIC

防水 防尘 阻燃

防水配电箱 (HA 系列)
Waterproof Distribution Box (HA Series)

产品概述 Product Overview

- 适用于防水、防尘、防腐蚀等特殊场合。
- 防护等级：IP65
- Suitable for waterproof, dustproof, anti-corrosion and other special occasions.
- Protection level: IP65

Order Code 订货号：HA4
140×210×100

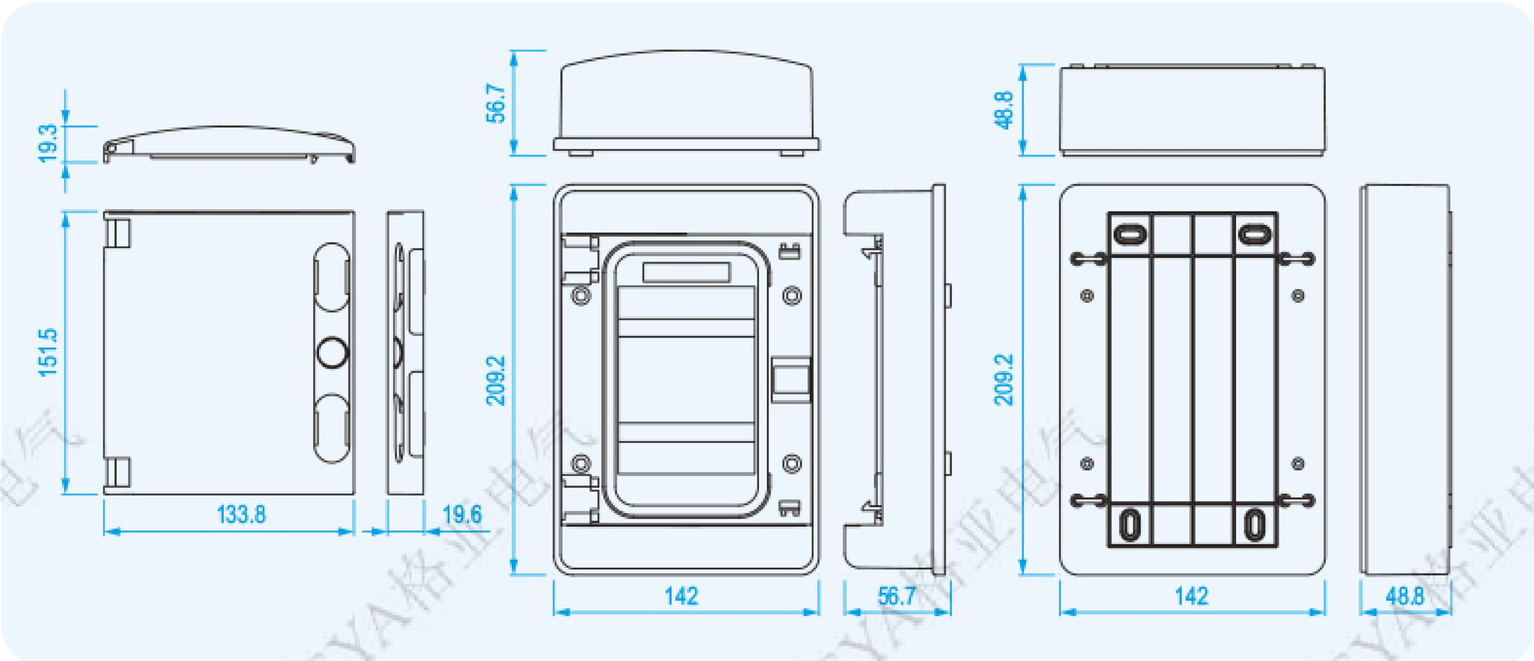

Order Code 订货号：HA8
215×210×100

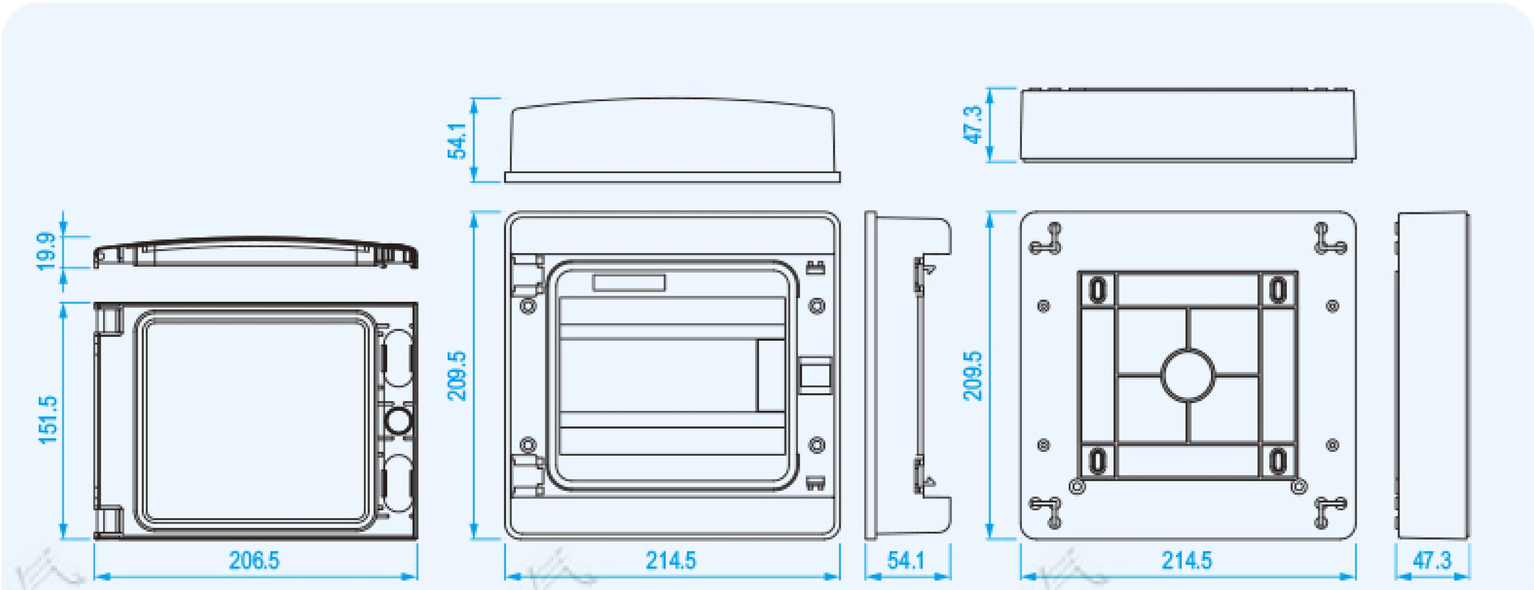

Order Code 订货号：HA8H
215×210×114

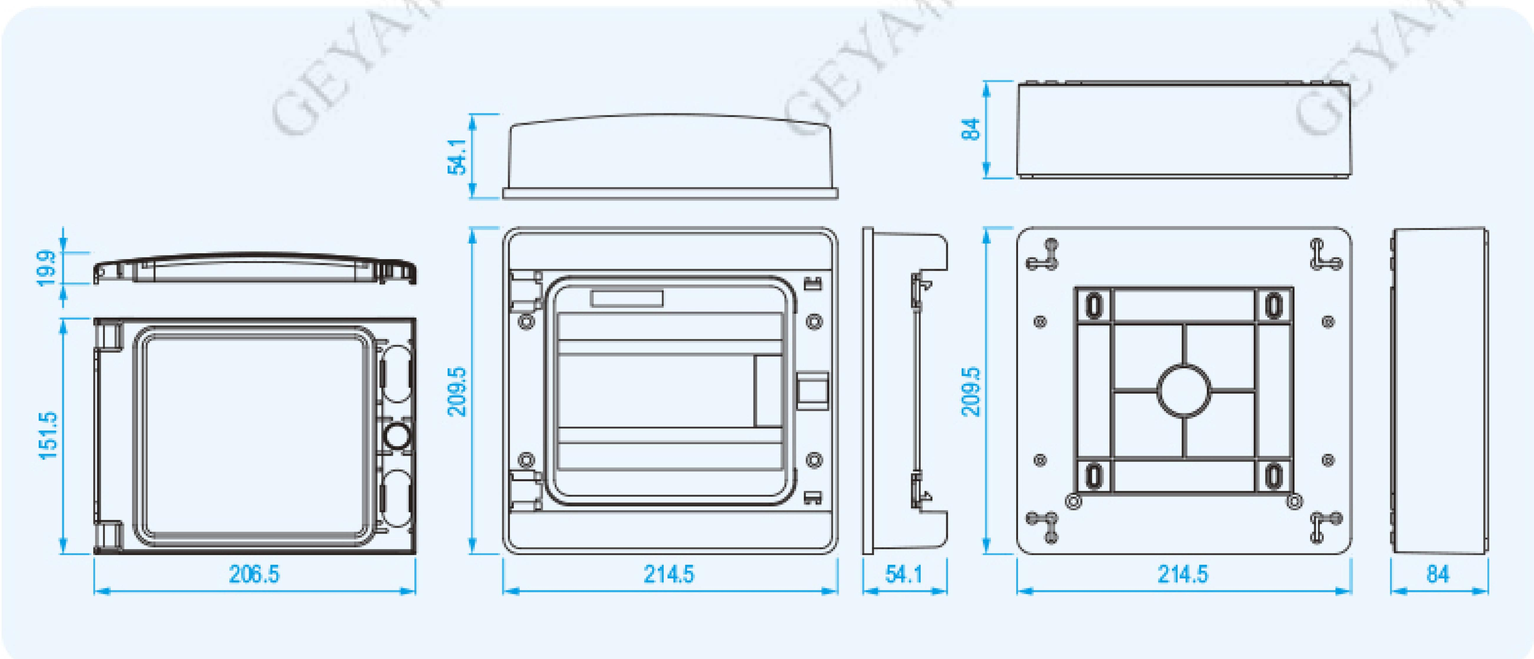

Order Code 订货号：HA12
300 × 260 × 140

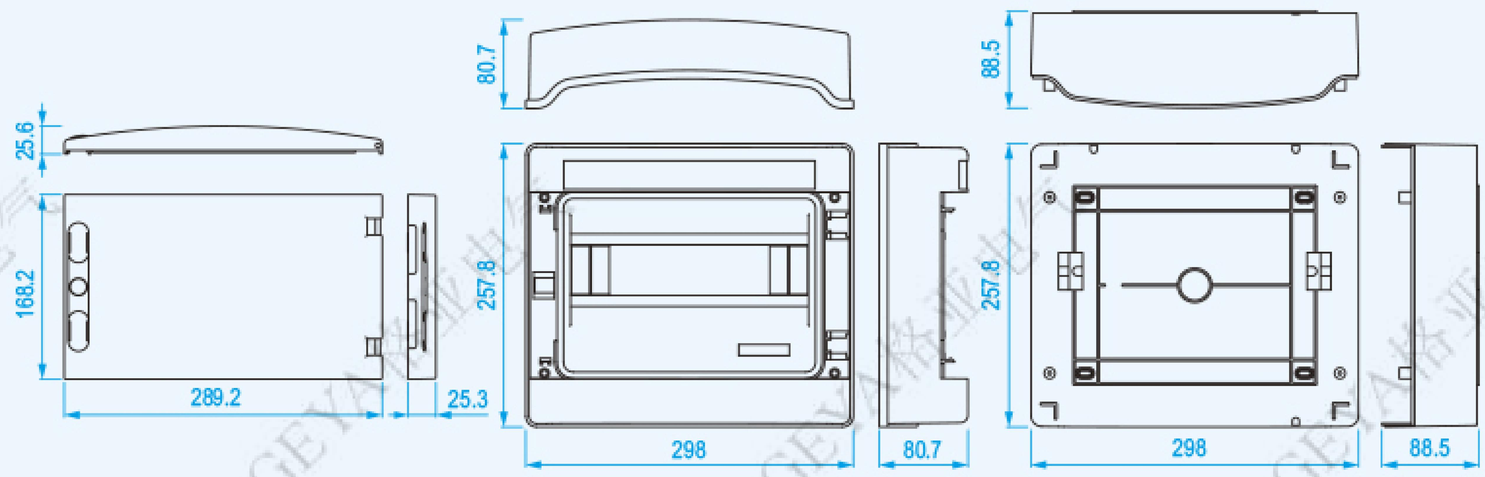

Order Code 订货号：HA18
410 × 285 × 140

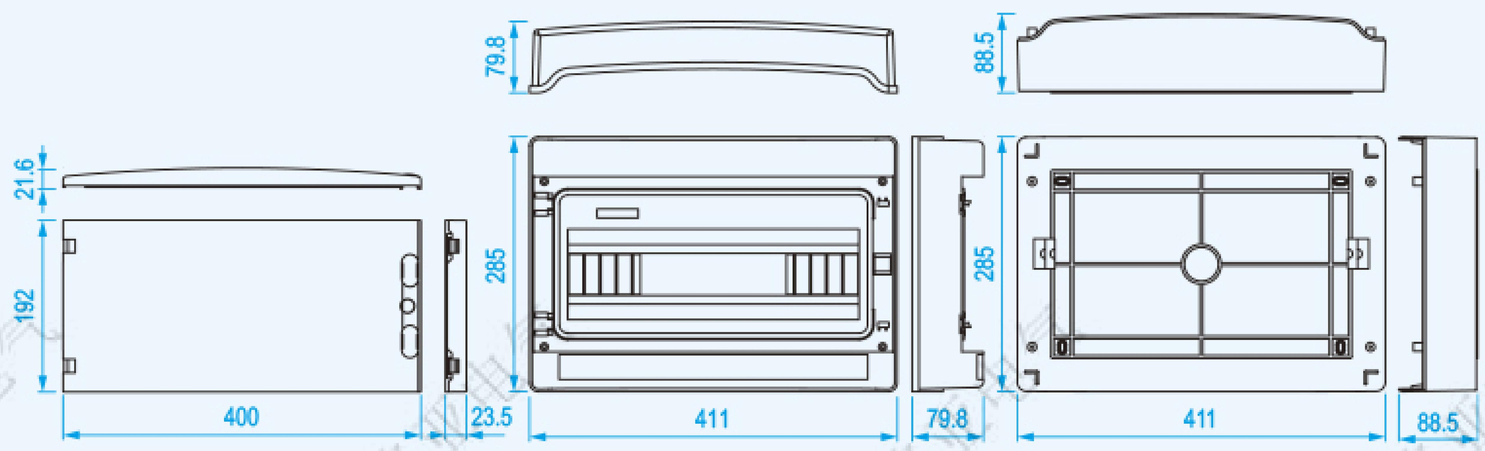

Order Code 订货号：HA24
298 × 420 × 140

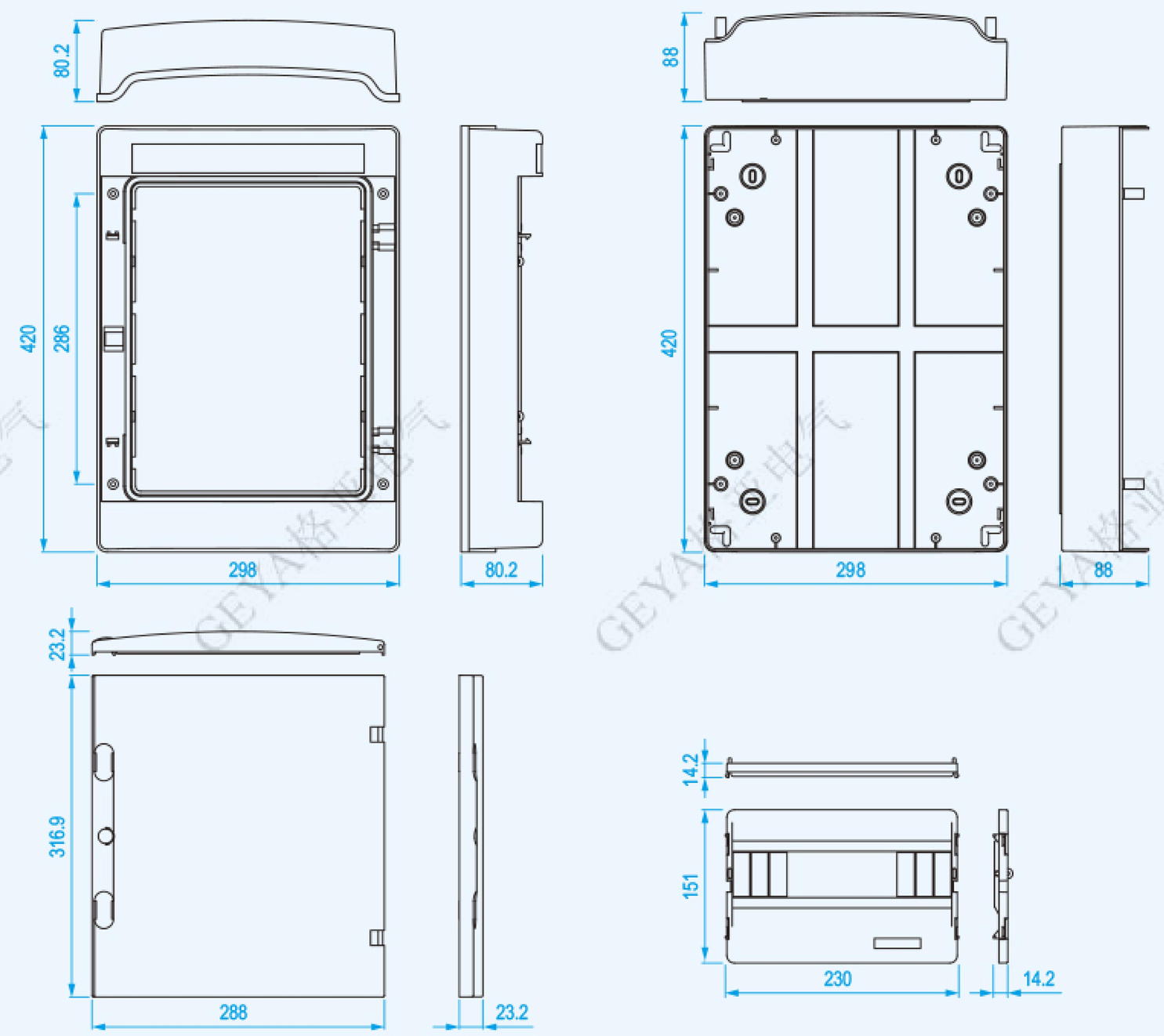

Order Code 订货号：HA26
572.5×318×149.5

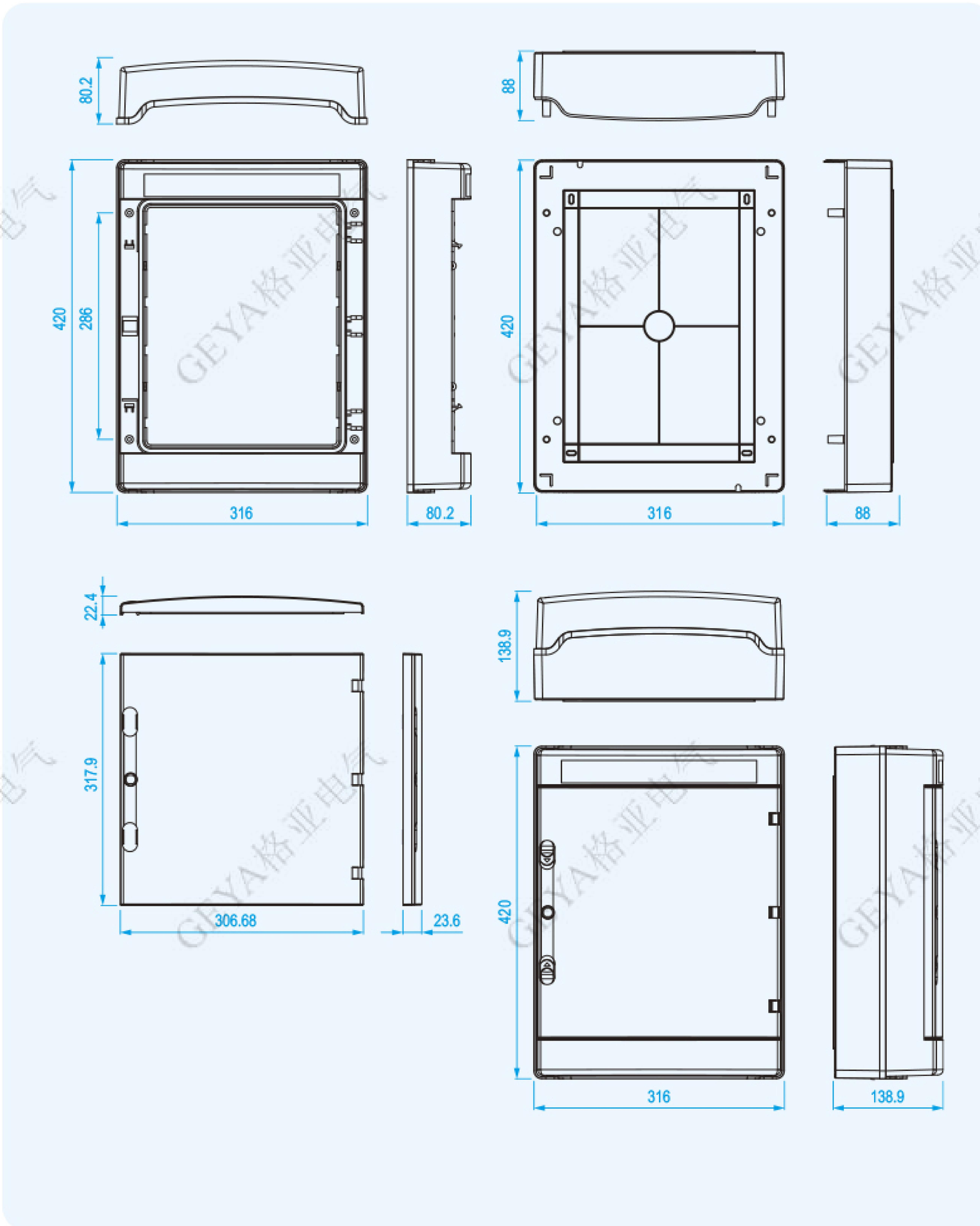

GEYA格亚电气

Order Code 订货号：HA36
572.5×318×149.5

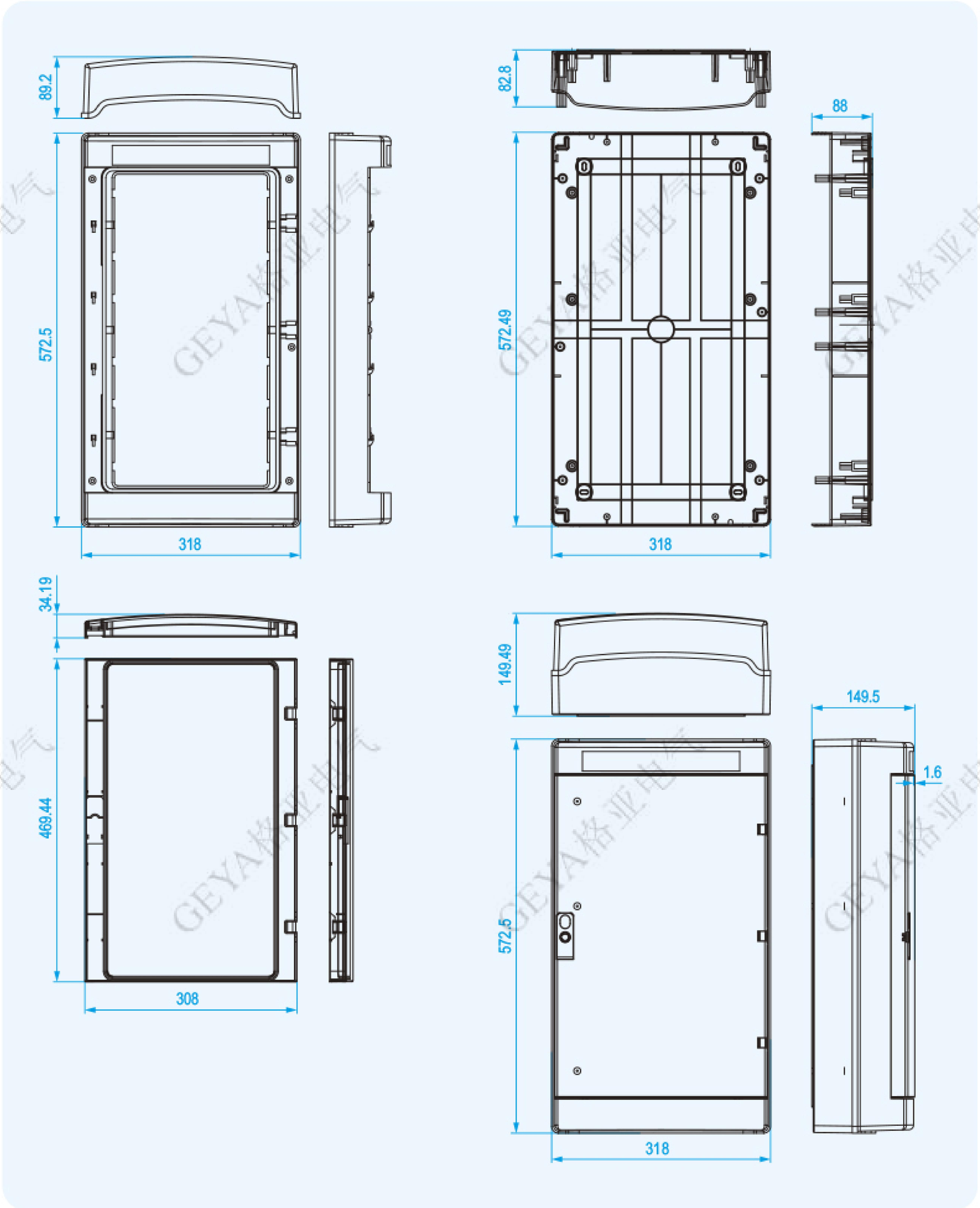

GEYA格亚电气

Order Code 订货号：HA54
597.5 × 427 × 149.5

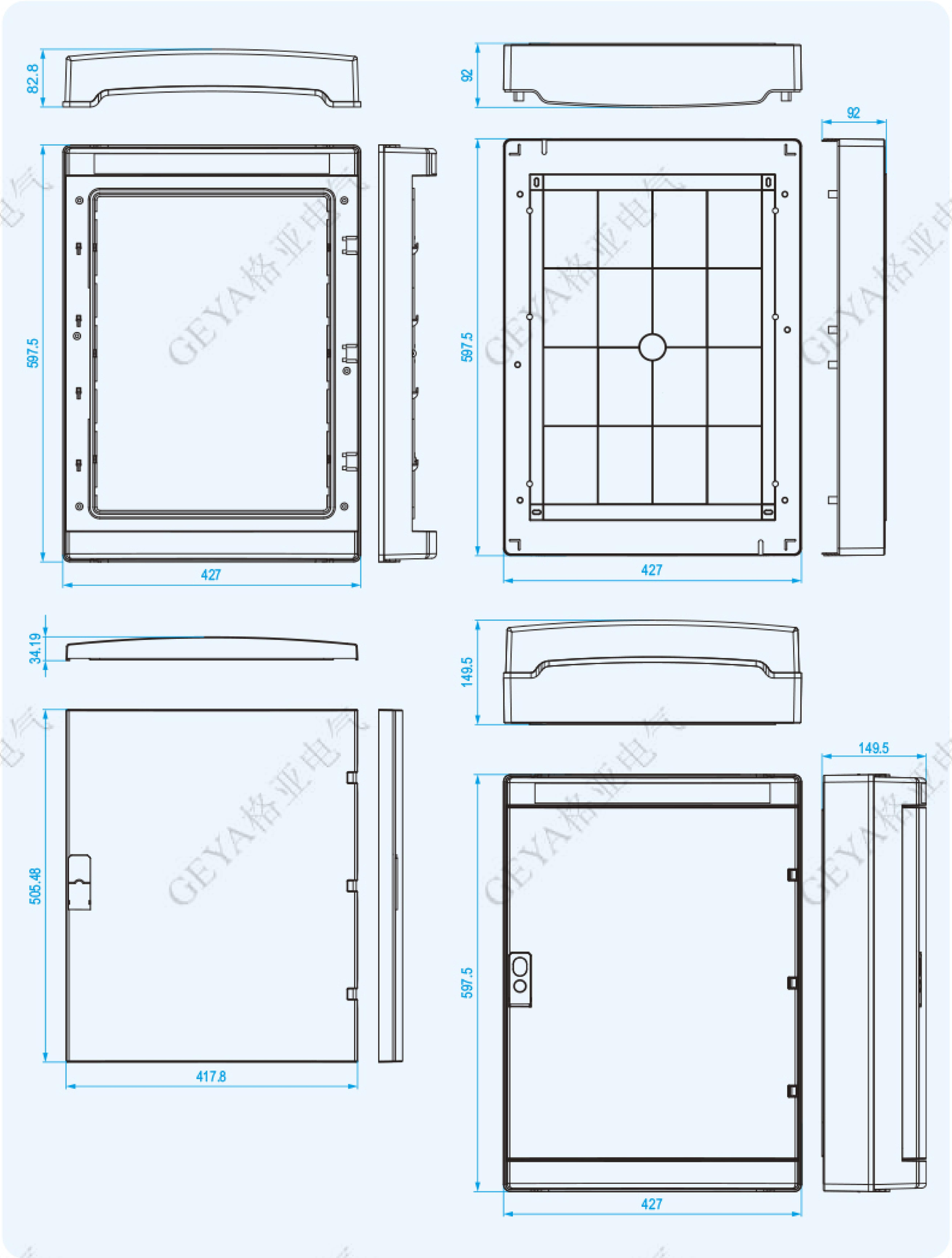

GEYA格亚电气